ToPin®

TP12-12 *(12V 12AH)*

MAINTENANCE-FREE RECHARGEABLE BATTERY

General Features

- Absorbent Glass Mat (AGM) technology for efficient gas recombination of up to 99% and freedom from electrolyte maintenance or water adding.
- Not restricted for air transport-complies with IATA/ICAO Special Provision A67.
- UL-recognized component.
- Can be mounted in any orientation.
- Computer designed lead, calcium tin alloy grid for high power density.
- Long service life, float or cyclic applications.
- Maintenance-free operation.
- Low self discharge.

Dimensions and Weight

Length(mm / inch)	151 / 5.94
Width(mm / inch)	98 / 3.86
Height(mm / inch)	95 / 3.74
Total Height(mm / inch)	101 / 3.94
Approx. Weight(Kg / lbs)	3.9 / 8.6
Standard Terminal	F1
Optional Terminal	F2

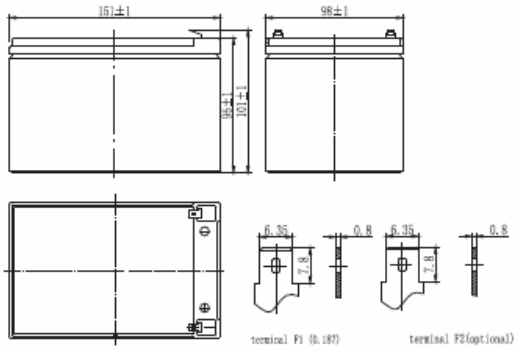

Specification

Nominal Voltage	12V
Number of cell	6
Design Life	3~5 years
Nominal Capacity 77°F(25°C)	
20 hour rate (0.6A, 10.5V)	12Ah
10 hour rate (1.14A, 10.5V)	11.4Ah
5 hour rate (2.05A, 10.5V)	10.25Ah
1 hour rate (8.14A, 9.6V)	8.14Ah
Internal Resistance	
Fully Charged battery 77°F(25°C)	17mOhms
Self-Discharge	
3% of capacity declined per month at 20°C(average)	
Operating Temperature Range	
Discharge	-20~60°C
Charge	-10~60°C
Storage	-20~60°C
Max. Discharge Current 77°F(25°C)	180A(5s)
Short Circuit Current	600A
Charge Methods: Constant Voltage Charge 77°F(25°C)	
Cycle use	14.5-14.9V
Maximum charging current	3.6A
Temperature compensation	-30mV/°C
Standby use	13.6-13.8V
Temperature compensation	-20mV/°C

Discharge Constant Current (Amperes at 77°F25°C)

End Point Volts/Cell	5min	10min	15min	30min	1h	3h	5h	10h	20h
1.60V	46.4	31.7	24.8	13.8	8.14	3.18	2.12	1.18	0.61
1.65V	45.0	30.8	24.3	13.5	8.04	3.15	2.10	1.17	0.61
1.70V	43.5	29.9	23.7	13.3	7.94	3.12	2.07	1.16	0.61
1.75V	42.1	29.0	23.2	13.0	7.85	3.09	2.05	1.14	0.60
1.80V	40.6	28.2	22.6	12.7	7.75	3.06	2.02	1.12	0.59

Discharge Constant Power (Watts at 77°F25°C)
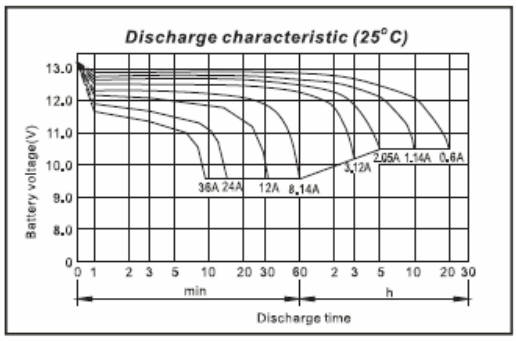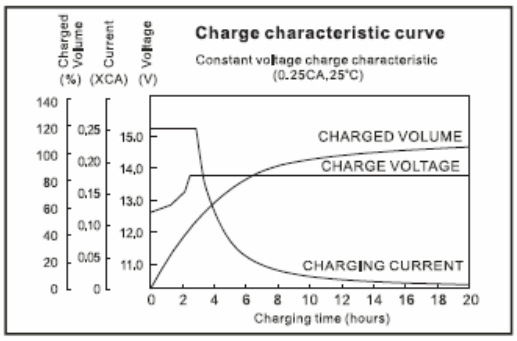
End Point Volts/Cell	5min	10min	15min	30min	45min	1h	2h	3h	5h
1.60V	86.2	58.7	46.7	27.0	20.6	16.1	8.50	6.50	4.20
1.65V	84.1	57.7	46.0	26.6	20.4	16.0	8.42	6.44	4.17
1.70V	81.9	56.6	45.3	26.2	20.1	15.8	8.33	6.37	4.14
1.75V	79.8	55.6	44.6	25.8	19.9	15.7	8.25	6.31	4.11
1.80V	77.6	54.6	43.9	25.4	19.6	15.5	8.16	6.24	4.08